IMPORTANT: IN THE INTEREST OF PRODUCT PERFORMANCE AND SAFETY PLEASE READ THESE INSTALLATION AND WARRANTY INSTRUCTIONS BEFORE INSTALLING THE PRODUCT.

MUST BE INSTALLED BY A LICENSED ELECTRICIAN

SAL products are designed in accordance with all mandatory AS/NZS Standards, which require installation in accordance with AS/NZS3000 by a qualified installer and regular cleaning and maintenance of the equipment. Products are sold in accordance with the following instructions and SAL standard terms and conditions of sale, available via www.sal.net.au.

Due to continued product and information updates, product data sourced from sal.net.au shall not form part of any contract and or technical performance guarantee unless expressly confirmed in writing by SAL at the time of order.

AMPLIFY SCS21TP32A 22kW AC THREE PHASE EV CHARGER electrical and installation specification effective 22/10/2026.

Model No.	Input (V)/(Hz)	Power (kW)	Line Current (A)	Charging Method	Charging Connector	Connector Cable Length(m)	Fitting Colour	Mass (N.W. kg)	Dimensions H x W x D (mm)
SCS21TP32A50BK	400/50 3P+N+PE	MAX. 22	32 per phase	RFID/APP/ Autostart	Type 2	5	Black	6.2	368 x 256 x 130
SCS21TP32A75BK	400/50 3P+N+PE	MAX. 22	32 per phase	RFID/APP/ Autostart	Type 2	7.5	Black	6.75	368 x 256 x 130

Electrical class	Class I	Residual current protection	30 mA AC built-in & 6 mA DC detection
Operating ambient min/max (°C)	-25 to 50	Storage ambient limit (°C)	-25 to 80
Operating humidity	10% to 85% RH, NC	Storage humidity	10% to 85% RH, NC
Charging connector type	Type 2	Ventilation	Not required during charging
IP rating	IP54	Product application	Residential interior or exterior spaces
IK rating (if relevant)	IK08	Product installation orientation	Wall-mount, vertical
Attachment type	Z	Altitude	≤ 2000 m
Supply connection	Factory-fitted fly lead, approx. 1 m	Standby power	< 5 W
PIXIE connectivity	No	Wireless connectivity	Wi-Fi 2.4 GHz, Bluetooth LE, RFID 13.56 MHz
IP rating: The IP54 rating applies to the charger mounted vertically with the supply cable connection correctly sealed. Do not open, modify or drill the enclosure.			
IP rating ALL products; Termination of the product must be made in accordance with the IP rating.			

General product application requirements (if applicable):

1. **Recycling** – SAL encourages recycling, please consider the environment when disposing of packaging, batteries & components.

2. **Periodic testing** – Test the RCD protecting the charger at least every six months by pressing its test button at the switchboard. If the RCD does not trip, contact a licensed electrician.

3. **Product maintenance** – In line with the relevant design standards and to protect your investment, it is important to have in place a routine cleaning program that reflects the installation environment and maintains the product in a clean and functional condition.

IMPORTANT - The supply must be isolated before any product maintenance or cleaning is conducted. In addition, damage to ANY cable or cord supplied with the product must be addressed as follows; For attachment type X having a specially prepared cable, if the external flexible cable is damaged, it must be replaced by an equivalent cable exclusively available from the manufacturer or authorised installer. For attachment type Y, if the external flexible cable is damaged, it must be exclusively replaced by an equivalent cable by the manufacturer or authorised installer. For attachment type Z, if the external flexible cable is damaged, the cable cannot be replaced and the product must be destroyed.

4. **Adverse, corrosive and coastal installation environments** – Unless the product is specifically designated for such applications in these installation instructions, which is supported by a professional maintenance program; installation of equipment in such environments is not recommended.

5. **Specific installation procedures** – This product must be installed by a licensed electrician. This charger is intended only for charging vehicles that do not require ventilation during charging.

• Safety precautions

(1) Do not install the charger where flammable or combustible materials are stored or used. The charger contains arcing parts.

(2) Do not use the charger if the enclosure, supply lead, charging cable or connector is damaged or faulty. Switch off the supply at the switchboard and contact a licensed electrician.

(3) Make sure the charging connector is clean and dry before use.

(4) Never touch the pins inside the charging connector, and never insert fingers or objects into it.

(5) Always return the connector to the plug holster when it is not in use.

(6) Do not use extension leads, adaptors or double adaptors with this charger.

(7) Do not open the product. There are no user-serviceable parts inside. Do not attempt any repairs yourself.

(8) Always follow the vehicle manufacturer's charging instructions and requirements when using this charger.

(9) Use the charger only to charge electric vehicles. Do not connect any other equipment to it.

(10) Supervise children near the charger. Do not let children operate or play with it.

(11) The charger contains radio transmitters (Wi-Fi, Bluetooth and RFID). During normal operation, keep a distance of at least 20 cm between the charger and your body. People with an implanted medical device, such as a pacemaker, should seek advice from their doctor or the device manufacturer before use.

(12) In an emergency, switch off the supply at the switchboard. If there is a fire, move away from the vehicle and the charger and call emergency service.

PRODUCT OVERVIEW

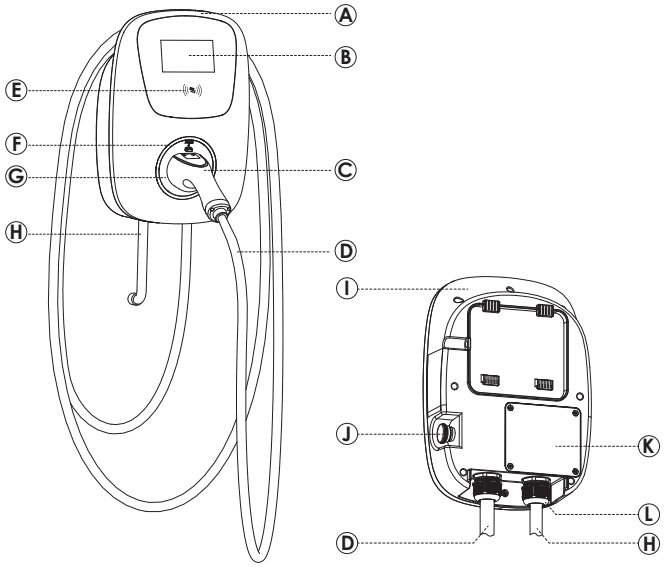

Dimensions (mm)

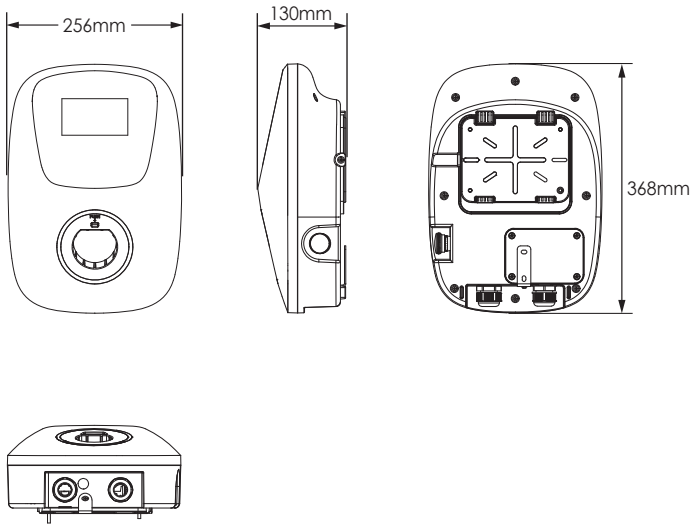

A Front cover
B LCD display
C Type 2 vehicle connector
D Charging cable
E RFID card reader
F Status indicator
G Plug holster
H Supply lead (factory-fitted)
I Rear housing
J Emergency stop button
K Terminal cover (do not open)
L Cable gland (supply lead)

Illustrations are for reference only. Refer to the actual product for details.

- **Packing list**

Check that all parts are included before starting the installation.

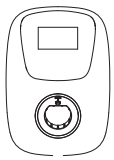

EV charge x1

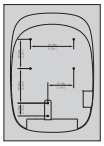

P Drilling template x1



Q Fixing plate x1



R L-shape mounting bracket x1

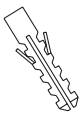

S Wall plug x6 Ø8 × 40 mm

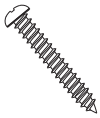

T Pan-head screw x6 ST5 x 40 mm



U Pan-head screw x1 ST4 x 18 mm



V Countersunk screw x1 ST4 x 18 mm



RFID card x2

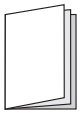

Installation instruction x1

- **Before you install**

(1) Choose a location that is convenient for daily use, where the charging cable reaches the vehicle's charging inlet without strain and does not create a trip hazard. The cable is 5 m (SCS21TP32A50BK) or 7.5 m (SCS21TP32A75BK) long.
(2) The charger is suitable for interior or exterior installation (IP54). Where possible, install it out of direct sunlight and sheltered from rain, for example in a garage, in a carport or under an eave.
(3) Keep the charger away from water sources, flammable materials, and oil or gas pipework. Do not install it where explosive or corrosive gases or vapours may be present.
(4) Mount the charger on a flat, solid, vertical wall able to support the charger and cable (up to 6.75 kg). The charger must be fixed upright and level.
(5) Position the charger so that the plug holster is between 0.6 m and 1.2 m above the floor or ground.
(6) Plan the supply connection: the charger has a factory-fitted supply lead of approx. 1 m. Install the junction box or socket-outlet where the lead reaches it without strain, normally directly below or beside the charger. It must have an IP rating suitable for its location.
(7) Leave enough clear space around the charger for operation and maintenance, and keep all cables at least 30 mm away from any heat source.

- **Storage before installation**

Store the charger in its packaging in a dry, well-ventilated indoor area: temperature −25 °C to +80 °C, relative humidity 10% to 85%, non-condensing.

INSTALLATION

• Electrical supply requirements

(1) Isolate the supply before working on any cable. Live work is not permitted.

(2) The charger must be supplied by a dedicated three-phase final subcircuit (400 V, 3P+N+PE, 50 Hz) protected by a 40 A, 4-pole, C-curve, Type A 30 mA RCBO. The charger incorporates DC residual current detection (RDC-DD to IEC 62955), which disconnects the supply at DC residual currents exceeding 6 mA.

(3) The fixed wiring must be selected and installed in accordance with AS/NZS 3000 and sized to AS/NZS 3008.1.1 for the installation method and route length — minimum 5 core × 6 mm² copper (L1, L2, L3, neutral and earth).

(4) The charger is supplied with a factory-fitted supply lead (**H**), approx. 1 m long, with five conductors (L1, L2, L3, N and PE). Connect it outside the charger — either hardwired into a junction box or isolating switch, or with a plug and socket-outlet (see Step 5). Do not open the charger to connect the supply.

(5) Connect the conductors strictly by function, not by colour. The charger must be effectively earthed.

(6) Test the installation in accordance with AS/NZS 3000 before use. Disconnect the supply lead (or unplug it) while carrying out insulation resistance tests.

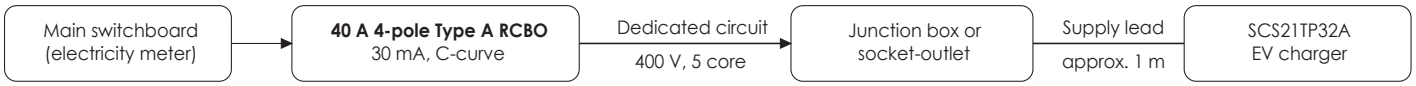

• Wall-mount installation

Step 1 – Mark and drill the holes

Hold the drilling template (**P**) level against the wall at the chosen height and mark the six hole positions. The plug holster must finish between 0.6 m and 1.2 m above the floor.

Drill six Ø7 mm holes, at least 45 mm deep.

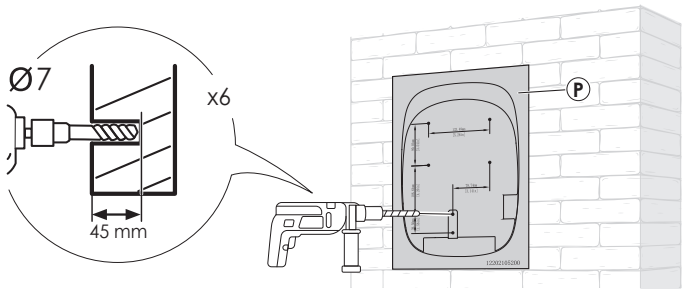

Step 2 – Fit the fixing plate and bracket

Insert the wall plugs (**S**) into the holes. Fix the fixing plate (**Q**) and the L-shape mounting bracket (**R**) to the wall with the six ST5 × 40 mm pan-head screws (**T**).

Make sure the fixing plate is level and that all screws are tight.

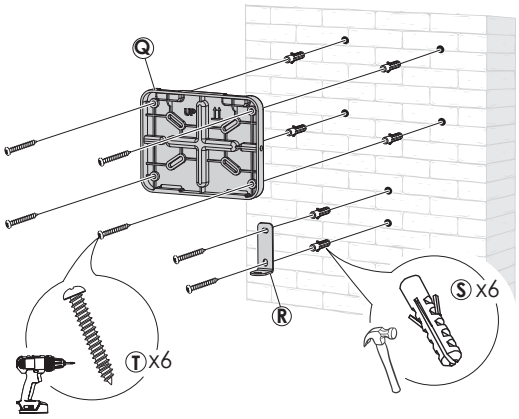

Step 3 – Hang the charger

Align the charger with the fixing plate (**Q**) and press it firmly into position until it is securely engaged. Make sure the supply lead (**H**) and the charging cable are not trapped behind the charger.

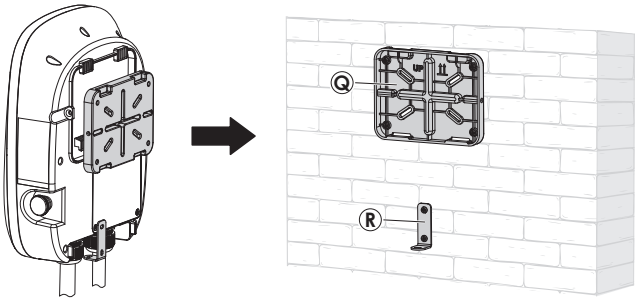

Step 4 – Secure the charger

Fit the ST4 × 18 mm countersunk screw (**V**) to secure the charger to the fixing plate (**Q**).

Fit the ST4 × 18 mm pan-head screw (**U**) through the base of the charger into the L-shape bracket (**R**). Both screws must be fitted.

Route the charging cable (**D**) neatly and stow the connector in the plug holster (**G**).

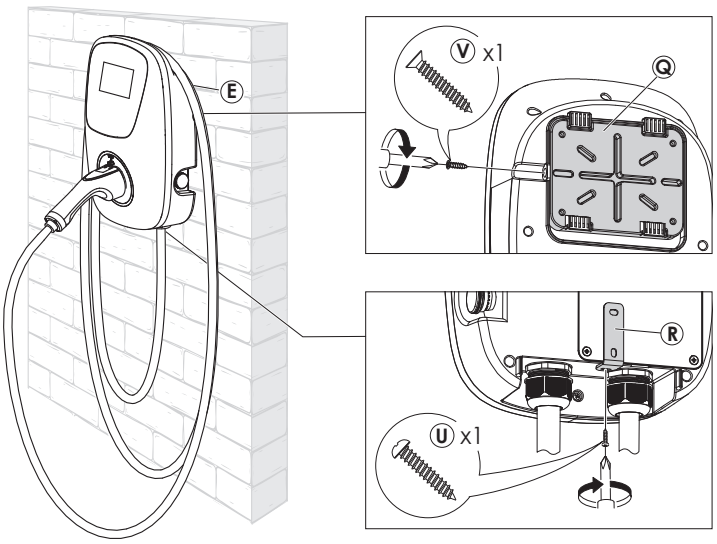

Step 5 – Connect the supply lead

Connect the supply lead (H) by one of the following methods. Do not open the charger.

Hardwired – Run the supply lead through a suitable cable gland into the junction box (or isolating switch) and terminate L1, L2, L3, N and PE to the matching conductors of the fixed wiring, as shown.

Plug-in – Fit a five-pin three-phase plug complying with AS/NZS 3123, rated not less than the circuit protective device, to the supply lead. Connect L1, L2, L3, N and PE to the plug terminals as marked, then insert the plug into the matching socket-outlet.

Make sure the earth conductor is connected and that all terminals and glands are tight.

Caution: in the supply lead, black is L2 (an active). In AS/NZS 3000 fixed wiring, black is neutral. Always connect by function, not by colour.

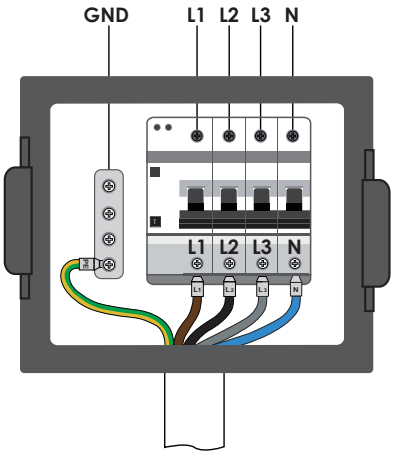

Step 6 – Commission the charger

(1) Switch on the RCBO (and the socket-outlet, for plug-in installations). The charger runs a self-test, including its residual current detection. The standby screen appears and the status indicator lights blue.

(2) Press the RCBO test button and confirm that it trips, then reset it.

(3) Set up the Smart Life app (page 7) and check the charging current setting.

(4) Carry out a test charge with the vehicle.

USING THE CHARGER

- **LCD Display (B)**

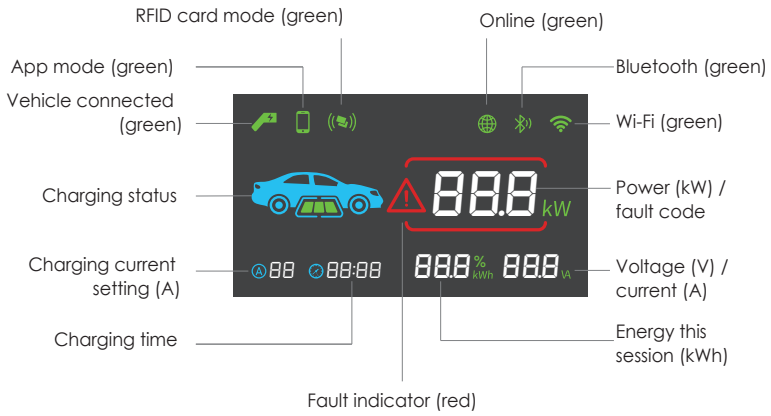

The display shows the charger's status and charging data. In standby it shows the charging current setting and the supply voltage.

During charging, the battery bars under the vehicle icon move back and forth, and the voltage and current readings alternate every 5 seconds.

If a fault occurs, the red fault indicator lights and the fault code (E01 to E11) is shown — see Fault codes (page 6).

Energy readings (kWh) on the display and in the app are indicative only. They are not trade-approved and must not be used for billing.

- **Status indicator (F)**

Blue, steady	Standby. The charger is powered and ready.
Green, steady	The connector is plugged into the vehicle (not charging, or charging complete).
Green, pulsing	Charging in progress.
Red, steady	Fault. The fault code is shown on the display — see Fault codes (page 6).

- **Charging your vehicle**

(1) Open the vehicle's charging inlet and check that it is clean and free of foreign objects.
(2) Take the connector out of the plug holster and plug it fully into the vehicle's charging inlet. The status indicator turns green.
(3) Start charging with the method set up for your charger:

– Autostart	Charging starts automatically once the connector is plugged in, with no card or app needed. Turn it on with Quick Start in the app, or with an RFID card (see Free-vend mode below).
– RFID card	Hold one of the supplied RFID cards against the card reader (E) until the status indicator flashes, then remove the card. Charging starts.
– App	Open the Smart Life app and slide the charging control to start charging.

(4) While charging, the status indicator pulses green and the display shows the power, energy, time, voltage and current.
(5) To stop charging, end the session in the app or from the vehicle. Unlock the vehicle with its key or app, then remove the connector.
(6) Return the connector to the plug holster and coil the cable neatly, clear of the ground.

- **RFID cards and free-vend mode**

Two RFID cards (13.56 MHz, MIFARE Classic) are supplied. Keep them in a safe place — a card is needed to restart charging after a power outage and to change the free-vend setting.

– Switch to free-vend	Hold an RFID card against the card reader (E) for 15 seconds. Card authorisation is then turned off: charging starts automatically whenever the connector is plugged in, without a card or the app.
– Switch back	Hold the card against the card reader for 15 seconds again.

In free-vend mode anyone can charge from the charger. Use it only where access to the charger is restricted, for example in a private garage.

- **Emergency stop button**

Press the emergency stop button (J) on the side of the charger to stop charging immediately in an emergency, or if charging does not stop normally. The display shows E08. To reset, turn the button clockwise until it springs out, then restart charging.

- **After a power outage**

The charger does not resume charging automatically when power is restored. To restart charging, hold an RFID card against the card reader (E).

- **Temperature protection**

If the charger's internal temperature becomes too high, it reduces the charging current automatically. If the temperature keeps rising, charging stops and E05 is shown. Charging can be restarted once the charger has cooled.

FAULT CODES AND TROUBLESHOOTING

• Fault codes

When a fault occurs, the status indicator lights red and the fault code is shown on the display.

Code	Fault	What to do
E01	Overvoltage	The supply voltage is too high. If the fault persists, have the supply checked by a licensed electrician.
E02	Undervoltage	The supply voltage is too low. If the fault persists, have the supply checked by a licensed electrician.
E03	Control pilot (CP) fault	Unplug the connector and check the connector and the vehicle inlet for dirt or damage, then plug it in again. If the fault repeats, contact the place of purchase.
E04	Residual current (leakage) fault	Unplug the connector and plug it in again. If the fault repeats, contact a licensed electrician.
E05	Over-temperature	The charger is too hot and has stopped charging. Unplug the connector and let the charger cool for at least 15 minutes. If this happens often, reduce the charging current in the app or shade the charger from direct sun.
E06	Earth fault	The earthing connection is missing or unreliable. Stop using the charger and contact a licensed electrician.
E07	Overcurrent	The vehicle has drawn more than the set current. Switch the charger off at the switchboard, then switch it back on. If the fault repeats, contact a licensed electrician.
E08	Emergency stop	The emergency stop button has been pressed. Turn the button clockwise to release it, then restart charging.
E09	Welded relay contacts	Do not touch the connector pins. Switch off the supply at the switchboard and contact a licensed electrician.
E10	Control pilot (CP) negative voltage fault	Unplug the connector and plug it in again. If the fault repeats, contact the place of purchase.
E11	Residual current self-test fault	The built-in residual current detection has failed its self-test. Switch the charger off at the switchboard, thenback on. If the fault repeats, stop using the charger and contact a licensed electrician.

• Troubleshooting

Problem	What to check
The display and status indicator are off	Check that the charger's RCBO at the switchboard is switched on (for plug-in installations, also check the plug and socket-outlet). If it has tripped, reset it. If it trips again, stop using the charger and contact a licensed electrician.
Charging does not start	Make sure the connector is fully inserted and locked by the vehicle. Check the start method: Quick Start (Autostart) s witched on in the app, an RFID card held against the reader, or charging started in the app. Check that no scheduled or delayed charge is set in the app or in the vehicle. Check the display for a fault code.
Charging is slower than expected	Check the charging current setting in the app and the vehicle's own charging limit. Many vehicles accept less than 22 kW from a three-phase AC charger — check the rating of the vehicle's on-board charger. The charger also reduces the current automatically if it becomes too hot.
Charging stops before the battery is full	Check the vehicle's charge limit and schedule settings, and whether the session was stopped in the app. Check the display for a fault code.
Charging starts without a card or the app	The charger is in free-vend mode (Autostart). See RFID cards and free-vend mode on page 5.
The charger cannot be found in the app	See 'If the charger cannot be added' on page 7.
The connector will not release from the vehicle	Unlock the vehicle with its key or app before removing the connector. Refer to the vehicle manufacturer's instructions.

MAINTENANCE AND CARE

(1) Isolate the supply at the switchboard before cleaning or inspecting the charger.
(2) Clean the enclosure with a soft, dry cloth, or a cloth lightly dampened with a mild neutral detergent. Do not use water jets, pressure washers, solvents or abrasive cleaners.
(3) Regularly inspect the enclosure, plug holster, connector, charging cable and supply lead for cracks, deformation, discolouration, corrosion, or damage such as crushing or rodent bites. If any damage is found, stop using the charger and contact a licensed electrician.
(4) Keep the connector pins clean and dry. Do not insert any object into the connector. If the pins are dirty or discoloured, have the connector inspected by a licensed electrician.
(5) Check that the connector latches correctly in the vehicle inlet, and that it is not loose or abnormally hot during charging.
(6) If the charger will not be used for an extended period, switch it off at the switchboard and keep the connector in the plug holster.

SMART LIFE APP

The charger connects to the free Smart Life app over Wi-Fi (2.4 GHz) and Bluetooth. Use the app to start and stop charging, set the charging current, schedule or delay charging, and view charging records. An account is required.

• Download the app and create an account

(1) Scan the QR code, or search for 'Smart Life' in the App Store or on Google Play, and install the app.
(2) Open the app, tap **Sign Up** and select your country or region (Australia).
(3) Register with your email address, or with your Google or Apple account, enter the verification code and set a password.

Smart Life app

• Connect the charger to the app

Before you start, make sure the charger is powered (standby screen). On your phone, turn on Wi-Fi, Bluetooth and Location Services, and connect to your 2.4 GHz Wi-Fi network — 5 GHz networks are not supported. Stay close to the charger.
(1) On the app's Home screen, tap **+** (top right), then **Add Device**. The app searches for nearby devices.
(2) When **SAL EV Charger** appears, tap it.
(3) Select your 2.4 GHz Wi-Fi network, enter its password and tap **Next**.
(4) When **Added successfully** appears, tap Done. The charging screen opens.

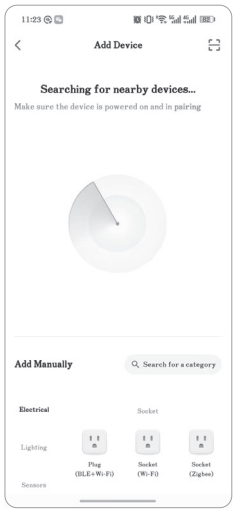

1. Searching for devices

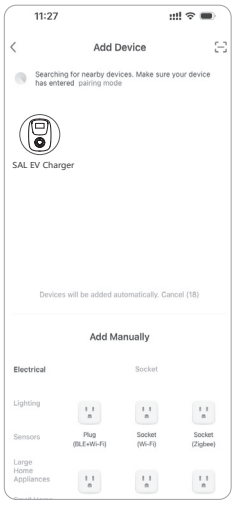

2. Tap SAL EV Charger

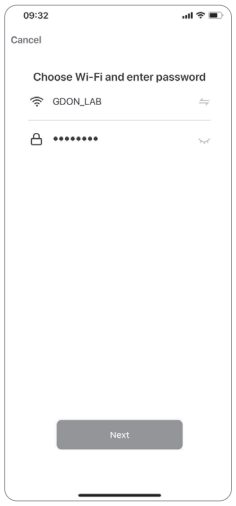

3. Enter the Wi-Fi password

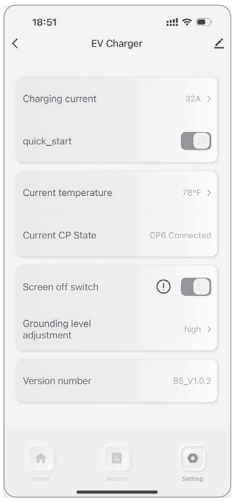

Settings screen

• If the charger cannot be added

(1) Check that Wi-Fi, Bluetooth and Location Services are on, and that your phone is connected to a 2.4 GHz network with a strong signal.
(2) If the charger is already linked to another account, remove it from that account, or reset the charger (see Factory reset) and try again.
After the first connection, if Wi-Fi is not available you can still start and stop charging and check its status over Bluetooth when you are near the charger. Data is synchronised when the Wi-Fi connection is restored.

• Using the app

Charging screen	Slide the charging control to start charging, or tap to end charging. The screen shows the charging time, energy (kWh), voltage, current and power.
Charging mode	**Real-time** – charging starts immediately. **Scheduled** – set a start and end time for one charge (Single timed) or for selected days (Repeat timer), for example to use off-peak electricity. **Delayed** – charging starts after a delay of 1 to 12 hours.
Charging current	Set the maximum charging current to suit the vehicle.
Quick Start	When on, charging starts as soon as the connector is plugged in (Autostart), without the app or an RFID card.
Screen off switch	Switches the display off. Tap the 'i' icon in the app for details.
Records	View energy use and details of past charging sessions. Records can be viewed but not exported.
Device settings	Tap the pencil icon to view device information (quote the virtual ID when contacting SAL), share the charger with family members, or remove it from your account.

• Factory reset

Unplug the connector from the vehicle. Press the emergency stop button and turn it clockwise to release it, three times in quick succession. All display icons light for 1 second to confirm the reset. The charger can then be added to a new account.

WARRANTY

In accordance with SAL's standard terms and conditions of sale, SAL warrant this product to be free from defects in materials and or workmanship for a period as stated below for goods not subject to incorrect installation, maintenance, operation, mishandling, environmental, unauthorised modifications or electrical operating conditions outside the nominated product specification as detailed in these installation instructions. The benefits to you given by this warranty are in addition to other rights and remedies you have under law. Our goods come with guarantees that cannot be excluded under the Australian Consumer Law. You are entitled to a replacement or refund for a major failure and compensation for any other reasonably foreseeable loss or damage. You are also entitled to have the goods repaired or replaced if the goods fail to be of acceptable quality and the failure does not amount to a major failure.

Warranty term – Residential usage (24) months. For New Zealand, please refer to www.sal.co.nz for warranty conditions and service.

How to make a claim?

Step # 1 – Within 30 days of the fault discovery, please contact the original place of the SAL product purchase during standard (local) business hours, with the following information **(a)** proof of purchase **(b)** description and quantity of the claimed fault **(c)** address of installation. **(d)** operating hours of the product.

Step # 2 – It is then the responsibility of the original place of product purchase to report the matter to SAL aftersales;

NSW | ACT	- SAL National Pty Ltd, 40 Biloela Street Villawood NSW 2163	| P # 02 9723 3099
QLD	- SAL National Pty Ltd, 36 Whitelaw Place Richlands QLD 4077	| P # 07 3879 5999
VIC | TAS	- SAL National Pty Ltd, 46-48 Keys Road Moorabbin VIC 3189	| P # 03 9532 3168
SA | NT	- SAL National Pty Ltd, 79 Frederick St Welland SA 5007	| P # 08 7084 1958
WA	- SAL National Pty Ltd, 29 Beringarra Av Malaga WA 6090	| P # 08 9248 7458
NZ	- Hamer, 130 Bush Road, Albany, Auckland, 0632	| P # 0800 239 239

Step # 3 - Upon review of your claim and if the product is required to be returned to SAL for technical evaluation, then at the owners expense the product must be returned to SAL as per the above nominated locations.

Step # 4 - Pending the evaluation, the claim will be validated resulting in the product being repaired or replaced with the same or best equivalent product at the discretion of SAL, or rejected if the product fault was found to be caused by conditions beyond the responsibility of SAL warranty obligations. Consideration of installation, product removal, return freight and or testing fees are not the responsibility of SAL.