IMPORTANT: IN THE INTEREST OF PRODUCT PERFORMANCE AND SAFETY PLEASE READ THESE INSTALLATION AND WARRANTY INSTRUCTIONS BEFORE INSTALLING THE PRODUCT.

MUST BE INSTALLED BY A LICENSED ELECTRICIAN

SAL products are designed in accordance with all mandatory International and AS/NZS Standards, which require installation in accordance with AS/NZS3000 by a qualified installer and regular cleaning and maintenance of the equipment. Products are sold in accordance with the following instructions and SAL standard terms and conditions of sale, available via www.sal.net.au.

Due to continued product and information updates, product data sourced from sal.net.au shall not form part of any contract and or technical performance guarantee unless expressly confirmed in writing by SAL at the time of order.

STARGEM IV SES7070 TC2 LED FLOODLIGHT electrical and installation specification effective 13/11/2026.

Model No.	Input (V)/(Hz)	Power (W)	Line Current (A)	In-rush Current (A)	Lumens (lm)	CRI	Beam Angle	Fitting Colour	Mass (N.W. kg)	Dimension L x W x H (mm)
SES7070/1TC2WH	220-240/50	12	0.1	0.2A Max.@100µs	950/1150/1050	> 90	120°	White	0.52	180 x 59 x 115
SES7070/1TC2BK	220-240/50	12	0.1	0.2A Max.@100µs	950/1150/1050	> 90	120°	Black	0.52	180 x 59 x 115
SES7070/2TC2WH	220-240/50	2 x 12	0.2	0.2A Max.@100µs	2 x 950/1150/1050	> 90	2 x 120°	White	0.77	260 x 180 x 115
SES7070/2TC2BK	220-240/50	2 x 12	0.2	0.2A Max.@100µs	2 x 950/1150/1050	> 90	2 x 120°	Black	0.77	260 x 180 x 115

For sensors in SES7070/1TC2BK & SES7070/2TC2BK & SES7070/1TC2WH & SES7070/2TC2WH: NOTE - sensor control dials must face downwards

Power (W)	Input (V)/(Hz)	Detection Distance (m)	Detection Motion Speed (m/s)	Detection Angle	Working Humidity (RH)	Time Setting	Light Control (lux)	Sensor Type
12 (Idle 0.5W)	220-240/50	Max. 10m at installation heights 2.5 m	0.6~1.5	120°	< 93%	10sec ~ 7min	< 10~2000	PIR

Electrical class	Class I	CCT (K)	3000/4000/5700
Power Factor	> 0.5	Earth Leakage current	< 1mA
Operating ambient min/max (°C)	0 to 40	Storage ambient limit (°C)	0 to 50
Operating humidity	10% to 70% RH, NC	Storage humidity	10% to 70% RH, NC
Reported TM - 21, L_{90} @ 85 °C (hrs)	> 36,000	Reported TM - 21,L_{70} @ 85 °C (hrs)	> 54,000
Aiming restrictions (if any)	N/A	Product application	Residential and Commercial exterior spaces
IK rating (if relevant)	IK05	Product installation orientation	Vertical wall mount
CCT (k) switch control (TC)	Yes	Dimmable	No
Insulation cover rating (if any)	N/A	PIXIE connectivity	Yes, switch only
Replaceable LED	No (see clause 8)	IP rating	IP65
User replaceable LED	No (see clause 8)	Attachment type	N/A
IP rating for interior products: The designated IP rating is "from below the ceiling" unless otherwise specified.			
IP rating ALL products; Termination of the product must be made in accordance with the IP rating.			
Earth Leakage current: Is calculated in accordance with AS/NZS 60598.1:2017.			

General product application requirements (if applicable) :

1. **CCT or POWER selections (where supplied)** – IMPORTANT, where CCT colour temperature or POWER selection switching is provided, it is important to switch OFF the power before the selection is made, otherwise equipment damage may occur.

2. **Recycling** – SAL encourages recycling, please consider the environment when disposing of packaging, batteries & components.

3. **Switching or test intervals** – For optimum product performance, good design practice does not encourage 24/7 operation of lighting products without the provision of a routine switching or regulatory test cycle. As a guide for continual operation installations, a twelve (12) hour duration for Industrial and Commercial applications and a six (6) hour duration for Residential applications should be considered.

4. **Product maintenance** – In line with the relevant design standards and to protect your investment, it is important to have in place a routine cleaning program that reflects the installation environment and maintains the product in a clean and functional condition.

IMPORTANT - The supply must be isolated before any product maintenance or cleaning is conducted. In addition, damage to ANY cable or cord supplied with the product must be addressed as follows; For attachment type X having a specially prepared cable, if the external flexible cable is damaged, it must be replaced by an equivalent cable exclusively available from the manufacturer or authorised installer. For attachment type Y, if the external flexible cable is damaged, it must be exclusively replaced by an equivalent cable by the manufacturer or authorised installer. For attachment type Z, if the external flexible cable is damaged, the cable cannot be replaced and the luminaire must be destroyed.

5. **Adverse, corrosive and coastal installation environments** – Unless the product is specifically designated for such applications in these installation instructions, which is supported by a professional maintenance program; installation of equipment in such environments is not recommended.

6. **Dimming products** – Dimming circuits and product compatibility must be validated by the installer before installation; SAL cannot be responsible for third party changes in dimmer compatibility.

7. **Suspended products** – For installation safety, any suspended products must NOT be installed in high air movement spaces or locations subject to impact.

8. **Light source replacements** – (Non-replaceable light sources) - The light source of the product is deemed not replaceable, when the product reaches its end of life, the complete product must be replaced by a qualified installer. (Non-user replaceable light sources) - The light source of the product must only be replaced by the manufacturer or qualified installer. **Caution, risk of electric shock.**

9. **Interior downlights and sensors with remote drivers and electrical accessories** – The mounting facilities provided for the device (if any), need only be utilized if in the application of the product is required by AS/NZS3000. Drivers are not designed for installation environments that restrict conventional airflow.

10. **Ripple injection, induced flicker (QLD & NSW regions)** – Installations subject to off-peak ripple induced flicker, (which are beyond the manufactures control), should strongly consider the use of circuit filtering products, or for interior downlight installations, the use of products designed to block the signal interferences, such as the SAL SFI series.

11. **Floodlight products** – Unless nominated aiming restrictions or installation parameters apply, products are designed for installation environments between ground and 15 metres in height, subject to the desired optical performance being achieved. For floodlight installation environments that have restricted access (eg: columns and roof-lines) which are subject to unstable electrical supply or electrical surges (which void warranty), consideration of the installation of an independent surge protector is strongly recommended.

12. **Emergency enabled products** – In the interest of transport and safety, emergency products are supplied with the battery disconnected. In addition to specific emergency commissioning instructions, this battery MUST be connected at the time of installation. Continual use in emergency mode greater than 240 hours without recharge, will result in battery failure and void battery warranty.

13. **Specific installation procedures** (if any) - this device must be installed by a licensed electrician:

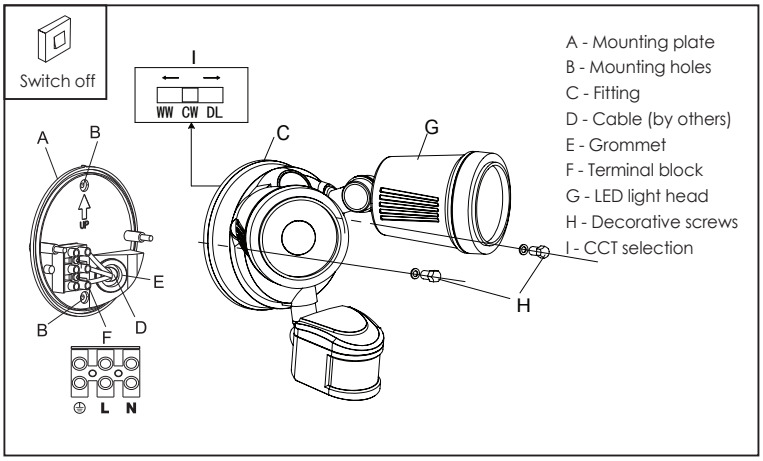

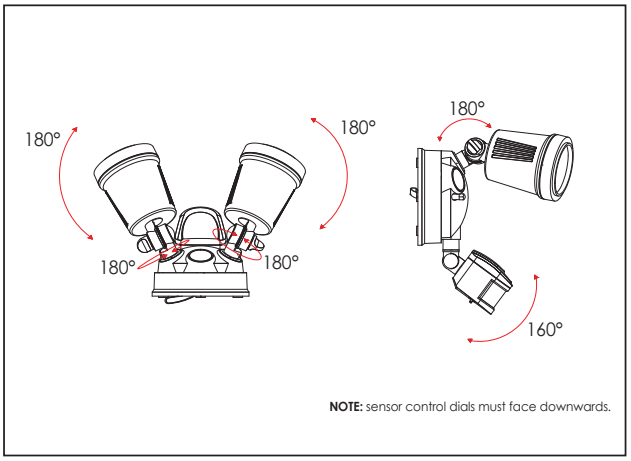

DETECTION COVERAGE

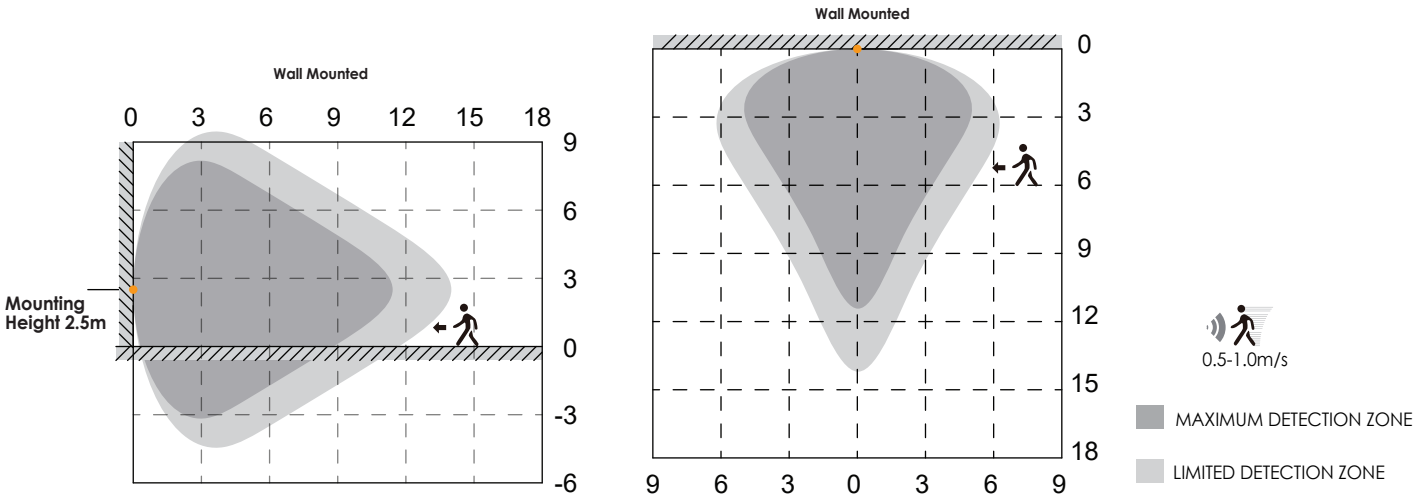

INSTALLATION GUIDELINES

To minimize the risk of false triggering, ensure the sensor is installed away from heat sources such as barbecues, air conditioners, other outdoor lighting, moving vehicles, and flue vents.

Do not direct the sensor toward objects that may move in the wind, including curtains, tall vegetation, or similar items.

Avoid locations with strong electromagnetic interference, as this may impair sensor performance.

Do not aim the sensor at reflective surfaces such as mirrors, smooth white walls, or swimming pools, as these may cause inconsistent detection behavior.

Please note that the detection range and angle of the PIR sensor—measured under standard conditions (20°C, dry weather)—may vary depending on the mounting height and installation environment. Sensor performance can also be affected by temperature fluctuations.

For optimal performance, position the sensor so that motion occurs across its field of detection rather than directly toward or away from it. Movement directly toward or away from the sensor may significantly reduce the effective detection range.

SENSOR SETTING (For SES7070/1TC and SES7070/2TC only) :

INITIAL SETUP/TESTING:

- Rotate TIME dial counter-clockwise to MIN (- symbol)
- Rotate LUX dial clockwise to MAX (+ symbol)
- Energise the fitting
- Wait for sensor to turn off (up to 1 minute)
- Wave hands in front of the fixture for lights to activate (Sensor and lamp heads can be adjusted for desired setup)

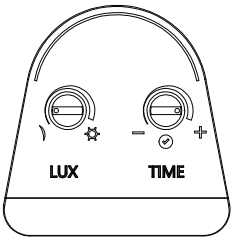

SETTINGS:

- TIME controls the duration of time the fixture stays on once activated (MIN for shorter duration, MAX for longer duration)
- LUX sensitivity (+ maximum sensitivity, - minimum sensitivity, threshold <10lux)

MANUAL OVERRIDE:

• To enable 'Manual Override' or 'Permanent On', simply switch the power **OFF and ON twice SLOWLY** within three seconds. The lights will now stay on permanently. To return to 'Automatic Mode', **switch the unit OFF and after ten seconds switch ON again**. The unit will resume normal operation.

14. **Warranty** – In accordance with SAL's standard terms and conditions of sale, SAL warrant this product to be free from defects in materials and or workmanship for a period as stated below for goods not subject to incorrect installation, maintenance, operation, mishandling, environmental, unauthorised modifications or electrical operating conditions outside the nominated product specification as detailed in these installation instructions. The benefits to you given by this warranty are in addition to other rights and remedies you have under law. Our goods come with guarantees that cannot be excluded under the Australian Consumer Law. You are entitled to a replacement or refund for a major failure and compensation for any other reasonably foreseeable loss or damage. You are also entitled to have the goods repaired or replaced if the goods fail to be of acceptable quality and the failure does not amount to a major failure.

Warranty term – Residential usage (60) months, Commercial usage (36) months, Replaceable Lamps (where supplied) (12) months and Lithium batteries where supplied (24) months from date of purchase. For New Zealand, please refer to www.sal.co.nz for warranty conditions and service.

How to make a claim?

Step # 1 – Within 30 days of the fault discovery, please contact the original place of the SAL product purchase during standard (local) business hours, with the following information **(a)** proof of purchase **(b)** description and quantity of the claimed fault **(c)** address of installation. **(d)** operating hours of the product.

Step # 2 – It is then the responsibility of the original place of product purchase to report the matter to SAL aftersales;

NSW | ACT	- SAL National Pty Ltd, 40 Biloela Street Villawood NSW 2163	| P # 02 9723 3099
QLD	- SAL National Pty Ltd, 36 Whitelaw Place Richlands QLD 4077	| P # 07 3879 5999
VICT | TAS	- SAL National Pty Ltd, 46-48 Keys Road Moorabbin Victoria 3189	| P # 03 9532 3168
SA | NT	- SAL National Pty Ltd, 79 Fredrick St Welland SA 5007	| P # 08 7084 1958
WA	- SAL National Pty Ltd, 29 Beringarra Av Malaga WA 6090	| P # 08 9248 7458
NZ	- Hamer, 130 Bush Road, Albany, Auckland, 0632	| P # 0800 239 239

Step # 3 - Upon review of your claim and if the product is required to be returned to SAL for technical evaluation, then at the owners expense the product must be returned to SAL as per the above nominated locations.

Step # 4 - Pending the evaluation, the claim will be validated resulting in the product being repaired or replaced with the same or best equivalent product at the discretion of SAL, or rejected if the product fault was found to be caused by conditions beyond the responsibility of SAL warranty obligations. Consideration of installation, product removal, return freight and or testing fees are not the responsibility of SAL.